FS-710

Tag: _____

8" Square x 6" Deep Sanitary Floor Sink

SPECIFICATION: Watts Drainage Products FS-710 8"(203) square x 6"(152) deep cast iron sanitary floor sink with white porcelain enamel coated interior, loose set porcelain enamel coated cast iron grate, aluminum dome bottom strainer, and no hub (MJ) outlet.

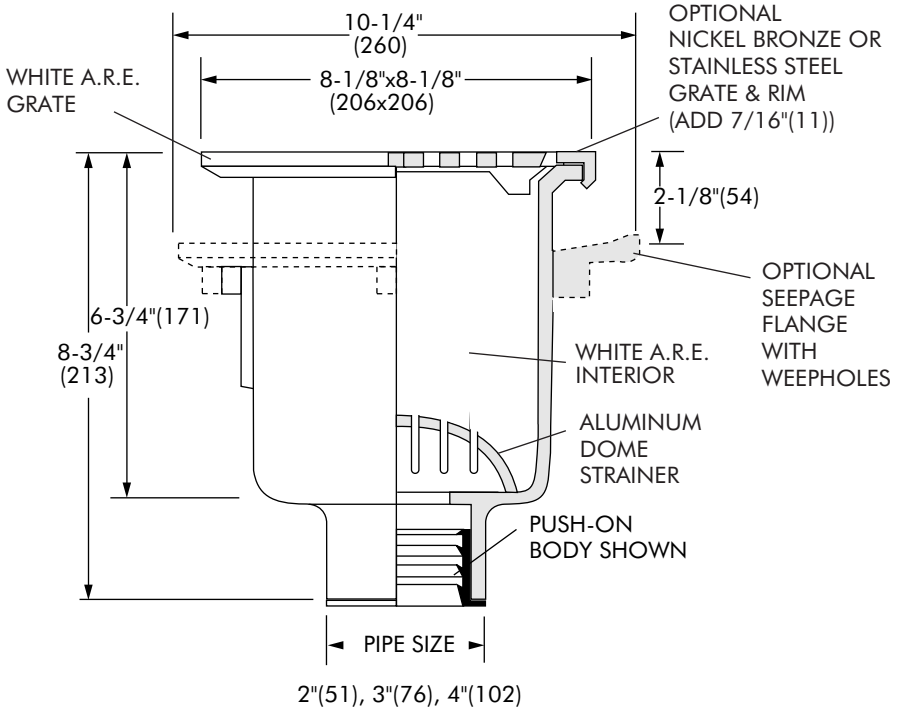

Order Code: FS-71 ☐☐-☐-☐

Ex. FS-712P-1-6

Pipe Sizing (Select One)		
Suffix	**Description**	
2	2"(51) Pipe Size	☐
3	3"(76) Pipe Size	☐
4	4"(102) Pipe Size	☐

Outlet Type (Select One)		
Suffix	**Description**	
NH	No Hub (MJ)	☐
P	Push On	☐
X	Inside Caulk	☐

Top (Select One)		
Suffix	**Description**	
(None)	8"(203) sq., Porcelain	☐
-1	8"(203) sq., Nickel Bronze	☐

Options (Select One or More)		
Suffix	**Description**	
-F	Flange with Weepholes	☐
-FC	Flange with Weepholes & Flashing Clamp	☐
-3	Stainless Steel Rim and Grate	☐
-5	Sediment Bucket	☐
-6	Vandal Proof(-1, -3 Only)	☐
-7	Trap Primer Tapping	☐
-21	Secondary Strainer	☐
-22	Less Grate	☐
-150	1/2 Grate	☐
-175	3/4 Grate	☐
-F4-1	4" Round Nickel Bronze Funnel	☐
-F6-1	6" Round Nickel Bronze Funnel	☐
-G-1	4x9" Oval Nickel Bronze Funnel	☐

Free Area Sq. In.
16

Job Name _____ Contractor _____

Job Location _____ Contractor's P.O. No. _____

Engineer _____ Representative _____

WATTS Drainage reserves the right to modify or change product design or construction without prior notice and without incurring any obligation to make similar changes and modifications to products previously or subsequently sold. See your WATTS Drainage representative for any clarification. Dimensions are subject to manufacturing tolerances.

CANADA: 5435 North Service Road, Burlington, ON, L7L 5H7 TEL: 905-332-6718 TOLL-FREE: 1-888-208-8927 Website: www.wattsdrainage.ca

© Watts Drainage 2004